Summary in Graph

Exam Summary (GO Classes CS Test Series 2026 | Algorithms | Topic Wise Test 3)

Qs. Attempted:	0 0 + 0	Correct Marks:	0 0 + 0
Correct Attempts:	0 0 + 0	Penalty Marks:	0 0 + 0
Incorrect Attempts:	0 0 + 0	Resultant Marks:	0 0 + 0

Total Questions:	15 5 + 10
Total Marks:	25 5 + 20
Exam Duration:	45 Minutes
Time Taken:	0 Minutes

Individual Question Statistics

Select Metric: Marks Obtained

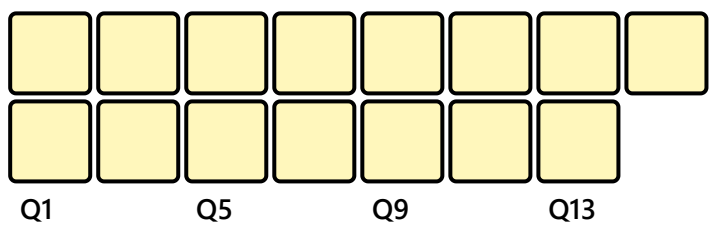

* Average Stats based on first-attempt stats of Top 10% (100) out of 996 users

EXAM RESPONSE EXAM STATS FEEDBACK

Technical

Q #1 Multiple Choice Type Award: 1 Penalty: 0.33 Algorithms

Consider two statements $\mathrm{S1}$ and $\mathrm{S2}$.

- $\mathrm{S1}$: Suppose T is a shortest paths tree for Dijkstra's algorithm. After adding $c > 0$ to every edge in the graph, T is still a shortest paths tree for the modified graph.
- $\mathrm{S2}$: The heaviest edge in a graph cannot belong to a minimum spanning tree.

Choose the correct option:

A. $S1$ is correct but $S2$ is wrong.
B. $S2$ is correct but $S1$ is wrong.
C. Both are correct.
D. Both are False.

Your Answer: | Correct Answer: D | Not Attempted | Time taken: 00min 21sec | Discuss

Q #2 | Multiple Choice Type | Award: 1 | Penalty: 0.33 | Algorithms

Consider two statements $S1$ and $S2$.

- $S1$: Given a weighted directed graph with distinct weights, the shortest path between any two vertices will be unique.
- $S2$: A MST can contain negative edges.

Choose the correct option:

A. $S1$ is correct but $S2$ is wrong.
B. $S2$ is correct but $S1$ is wrong.
C. Both are correct.
D. Both are false.

Your Answer: | Correct Answer: B | Not Attempted | Time taken: 00min 00sec | Discuss

Q #3 | Multiple Choice Type | Award: 1 | Penalty: 0.33 | Algorithms

Consider two statements $S1$ and $S2$.

- $S1$: To find a shortest path for a graph with negative weights, we can eliminate negative edges by adding the large enough constant to every edge so that they all become non-negative. Then use Dijkstra's algorithm.
- $S2$: Let T be any MST and for any arbitrary edge $e \in T$. There exists a cut $(S, V - S)$ such that, e is minimum edge across this cut.

Choose the correct option:

A. $S1$ is correct but $S2$ is wrong.
B. $S2$ is correct but $S1$ is wrong.
C. Both are correct.
D. Both are false.

Your Answer: | Correct Answer: B | Not Attempted | Time taken: 00min 00sec | Discuss

Q #4 | Multiple Choice Type | Award: 1 | Penalty: 0.33 | Algorithms

Consider two statements $S1$ and $S2$.

- $S1$: To solve the single-source-shortest-paths (SSSP) problem for a graph with no negative-weight edges, it is necessary that some edge be relaxed at least twice.
- $S2$: Prim's and Kruskal's algorithms still work if the edge weights are allowed to be negative.

Choose the correct option:

A. $S1$ is correct but $S2$ is wrong.
B. $S2$ is correct but $S1$ is wrong.
C. Both are correct.

D. Both are False.

Your Answer: | Correct Answer: B | Not Attempted | Time taken: 00min 00sec | Discuss

Q #5 | Multiple Select Type | Award: 1 | Penalty: 0 | Algorithms

Choose the CORRECT option(s)

A. The first edge added by Kruskal's algorithm can be the last edge added by Prim's algorithm.
B. In a graph, if one raises the lengths of all edges to the power 3, the minimum spanning tree will stay the same.
C. The heaviest edge in a graph cannot belong to the minimum spanning tree.
D. The maximum spanning tree (spanning tree of maximum cost) can be computed by negating the cost of all the edges in the graph and then computing minimum spanning tree.

Your Answer: | Correct Answer: A;B;D | Not Attempted | Time taken: 00min 00sec | Discuss

Q #6 | Multiple Choice Type | Award: 2 | Penalty: 0.67 | Algorithms

Consider two statements $\mathrm{S1}$ and $\mathrm{S2}$.
The graph is stored in the Adjacency list.

- $\mathrm{S1}$: Assume that you are given a magical priority queue data structure, which performs extract-min, insert and decrease-key in $O(1)$ time each. Then you can implement Dijkstra's algorithm to run in $O(\mathrm{V}+\mathrm{E})$ time on a graph with V vertices and E edges.
- $\mathrm{S2}$: Let C be any cycle in a graph G with distinct costs, and let edge e be the cheapest edge belonging to C. Then e belongs to all minimum spanning tree of G.

Choose the correct option:

A. $\mathrm{S1}$ is correct but $\mathrm{S2}$ is wrong.
B. $\mathrm{S2}$ is correct but $\mathrm{S1}$ is wrong.
C. Both are correct.
D. Both are False.

Your Answer: | Correct Answer: A | Not Attempted | Time taken: 00min 00sec | Discuss

Q #7 | Multiple Choice Type | Award: 2 | Penalty: 0.67 | Algorithms

Consider a source which outputs independent random letters from the alphabet $A = \{a, b, c, d, e\}$ with probabilities $p_a = 1/4, p_b = 1/4, p_c = 1/6, p_d = 1/6$ and $p_e = 1/6$.

Let L_3 be the random length of the Huffman code for a random sequence of 3 letters from that source. Compute the expectation $\mathbb{E}\left(L_3\right)$.

A. 7
B. 6
C. $7/3$
D. $5/3$

Your Answer: | Correct Answer: A | Not Attempted | Time taken: 00min 00sec | Discuss

Q #8 | Multiple Choice Type | Award: 2 | Penalty: 0.67 | Algorithms

Suppose that a MST of the following edge-weighted graph contains the edges with weights $x, y,$ and z.

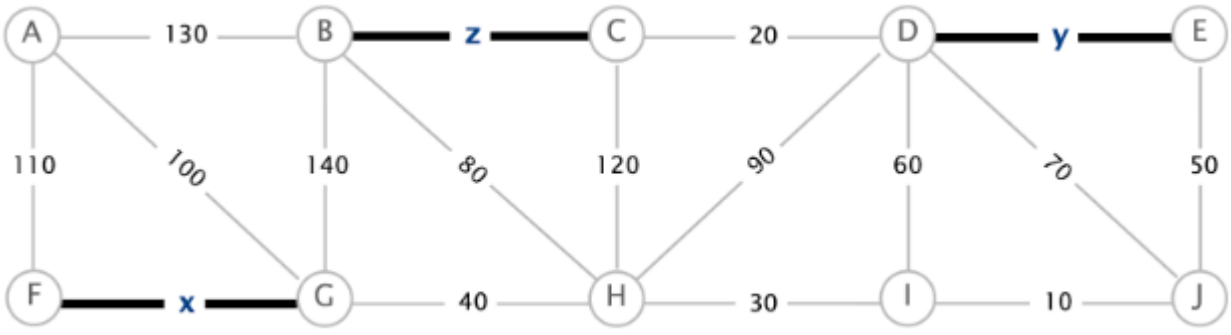

What will be the maximum value of $x + y + z$?

A. 200
B. 250
C. 300
D. 350

Your Answer: | Correct Answer: B | Not Attempted | Time taken: 00min 00sec | Discuss

Q #9 | Multiple Choice Type | Award: 2 | Penalty: 0.67 | Algorithms

Consider a standard Dijkstra algorithm that works as follows:

The queue is initialized with the usual initial values.

```
    While Queue is not empty

        Step 1: Extract the minimum distance vertex u
                from the priority queue,
 5.
        Step2: add vertex u to the tree

        Step3: relax all edges u → v (and update parent
               if relaxation decreases cost/distance).
10.
```

If after relaxation distance get change to lesser value then update parent$[v] = u$.

Suppose that you are running Dijkstra's algorithm on the edge-weighted digraph below, starting from vertex 0.

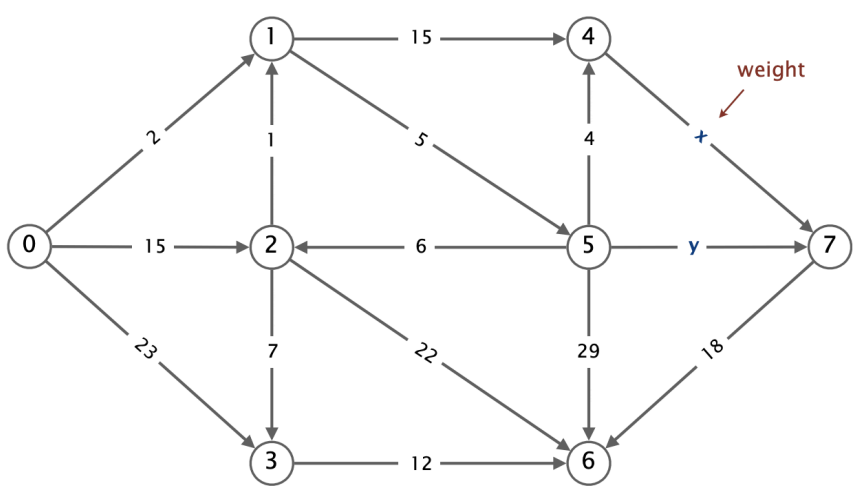

The table below gives values immediately after Step 3 when vertex 4 has been deleted from the priority queue in Step 1.

v	Priority queue with distances from source to v	parent[v]
0	0.0	*null*
1	2.0	$0 \to 1$
2	13.0	$5 \to 2$
3	23.0	$0 \to 3$
4	11.0	$5 \to 4$
5	7.0	$1 \to 5$
6	36.0	$5 \to 6$
7	19.0	$4 \to 7$

Based on the state of priority queue (given in table), what is the condition that x and y must satisfy?

A. $x = 8.0$ and $y \geq 12.0$
B. $x > 8.0$ and $y = 11.0$
C. $x = 7.0$ and $y = 11.0$
D. $x > 8.0$ and $y = 12.0$

Your Answer: | **Correct Answer: A** | Not Attempted | Time taken: 00min 00sec | Discuss

Q #10 | Multiple Choice Type | Award: 2 | Penalty: 0.67 | Algorithms

Consider yourself an engineer who wants to design a greedy algorithm for a tour company.

The tour company will be given a list of n tourists, each with a positive minimum hotel space requirement $s_1, \ldots, s_n$.

The tour company will also have a list of m available hotel rooms with each room R_j having an area a_j and a price p_j.

Assume hotel has enough rooms i.e. $m > n$.

The company wants to assign each tourist i a distinct room such that area of the assigned room $\geq s_i$.

Consider two strategies below. As an engineer, decide that which strategy will allot rooms to tourists such that the total price can be minimized.

Greedy strategy A: Take the tourist with the smallest space requirement. Assign that tourist the cheapest room that meets the requirement. Remove that tourist and the assigned room and repeat until all tourists are assigned rooms. (If no such room exists, output "no legal assignments").

Greedy strategy B: Take the tourist with the largest space requirement. Assign that tourist the cheapest room that meets the requirement. Remove that tourist and the assigned room and repeat until all tourists are assigned rooms. (If no such room exists, output “no legal assignments”).

The optimal solution is a solution that minimizes the total price for the tour companies.

A. Strategy A will work for the Optimal solution but strategy B would fail
B. Strategy B will work for the Optimal solution but strategy A would fail
C. Both strategies will work
D. No strategy will work

Your Answer: | Correct Answer: B | Not Attempted | Time taken: 00min 00sec | Discuss

Q #11 | Multiple Select Type | Award: 2 | Penalty: 0 | Algorithms

Which of the following is/are FALSE?

A. Let $\mathrm{G} = (\mathrm{V}, \mathrm{E})$ be a weighted graph and let M be a minimum spanning tree of G. The path in M between any pair of vertices v_1 and v_2 must be a shortest path in G.
B. Consider a graph $\mathrm{G} = (\mathrm{V}, \mathrm{E})$ with a weight $w_e > 0$ defined for every edge $e \in \mathrm{E}$. If a spanning tree T minimizes $\sum_{e \in \mathrm{T}} w_e$ then it also minimizes $\sum_{e \in \mathrm{E}} w_e^2$, and vice versa.
C. Dijkstra's algorithm is an example of a greedy algorithm.
D. A graph algorithm with $\Theta(\mathrm{E} \log \mathrm{V})$ running time is asymptotically better than an algorithm with a $\Theta(\mathrm{E} \log \mathrm{E})$ running time for a connected, undirected graph $\mathrm{G}(\mathrm{V}, \mathrm{E})$.

Your Answer: | Correct Answer: A;D | Not Attempted | Time taken: 00min 00sec | Discuss

Q #12 | Multiple Select Type | Award: 2 | Penalty: 0 | Algorithms

Recall the Interval Scheduling Problem. A set of n requests is given, each with a given start and finish time, $[s_i, f_i]$. The objective is to compute the maximum number of activities whose corresponding intervals do not overlap.

Consider the following alternative greedy algorithms for the Interval scheduling problem. Choose all algorithm(s) that always constructs an optimal schedule.

A. Earliest Activity First (EAF): Choose the job that starts first, discard all conflicting jobs, and repeat
B. Shortest Activity First (SAF): Choose the job with the shortest duration, discard all conflicting jobs, and repeat.
C. Choose the job that starts last, discard all conflicting jobs, and repeat.
D. Choose the job that ends last, discard all conflicting jobs, and repeat.

Your Answer: | Correct Answer: C | Not Attempted | Time taken: 00min 00sec | Discuss

Q #13 | Multiple Choice Type | Award: 2 | Penalty: 0.67 | Algorithms

The following diagram shows the set of edges (in thick black lines) selected at some intermediate step of an MST algorithm. Lighter edges are not yet in MST.

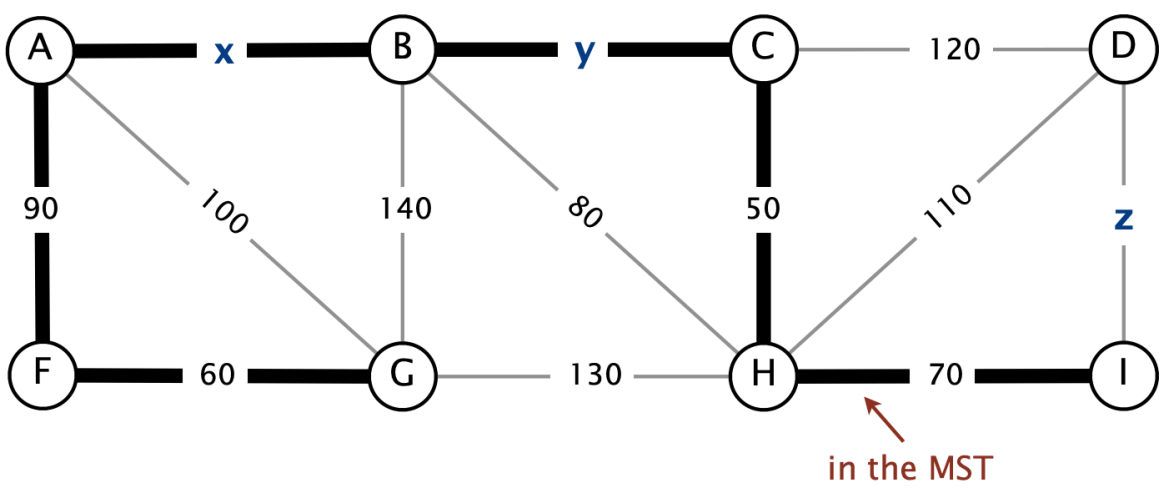

Assume that we got above the intermediate state using Kruskal's algorithm.

What would be the maximum value of $x + y - z$?

A. 100

B. 110
C. 80
D. 130

Your Answer: | Correct Answer: C | Not Attempted | Time taken: 00min 00sec | Discuss

Q #14 | Multiple Choice Type | Award: 2 | Penalty: 0.67 | Algorithms

G is a directed graph with negative weight edges but NO negative weight cycles. Which of the following hold for Dijkstra's algorithm on G :

A. Dijkstra's algo will always give the correct output since there is no negative cycle.
B. Dijkstra's algo may not give the correct output.
C. Dijkstra's algo may fail but if we add large positive weight to every edge then it will work.
D. Dijkstra's algo may not terminate in this case.

Your Answer: | Correct Answer: B | Not Attempted | Time taken: 00min 00sec | Discuss

Q #15 | Multiple Choice Type | Award: 2 | Penalty: 0.67 | Algorithms

Given an undirected, weighted graph G with positive, integer edge weights, we want to find a path shortest path from u to v with the below condition.

The condition is as follows as:

- If two paths from u to v are of the same cost, we will choose the path with fewer edges (i.e. if there is tie in shortest paths then we break the tie in favour of a path with fewer edges).
- If multiple shortest paths from u to v have the same number of edges, we can choose any such path.

Let G be given graph with E number of edges. We want to add some constant to each edge weight in G and modify G to G' such that by applying Dijkstra on G', we get shortest path in G as specified by given above condition.

That is, let $u \rightarrow s \rightarrow t \rightarrow v$ is shortest path in G' from u to v then it is shortest path in G with least edges.

Which of the following modification is possible to transform from G to G'?

A. We can add 1 to each edge weight in G then the shortest path in G' is the same as the shortest path in G with fewer edges.
B. We can add $1/\mathrm{E}$ to each edge weight in G then shortest path in G' is same as shortest path in G with fewer edges.
C. We can add $2/\mathrm{E}$ to each edge weight in G then the shortest path in G' is the same as the shortest path in G with fewer edges.
D. It is not always possible to get the same shortest path in G and G' by adding any constant.

Your Answer: | Correct Answer: B | Not Attempted | Time taken: 00min 00sec | Discuss

Copyright & Stuff